ITEM NO.	PART NUMBER	DESCRIPTION	DRAWING #	QTY.
1	SUB-PSD-SIDERAIL 550 DS	SIDE RAIL PSD 550 LEFT HAND	16-1205	1
2	RT 3x1x14ga L 109.75	SIDERAIL L: 109-3/4"	16-1205	1
3	FP-SR-TAB ITEM 3	SIDERAIL END CAP ITEM 3	10-1218	1
4	FP-SR-TAB ITEM 4	SIDERAIL END CAP ITEM 4	10-1218	1
5	FP-SR-TAB	SIDERAIL TAB	10-1218	3
6	SUB-PSD-SIDERAIL 550 PS	SIDE RAIL PSD 550 RIGHT HAND	16-1205	1
7	RT 3x1x14ga L 109.75	SIDERAIL L: 109-3/4"	16-1205	1
8	FP-SR-TAB ITEM 3	SIDERAIL END CAP ITEM 3	10-1218	1
9	FP-SR-TAB ITEM 4	SIDERAIL END CAP ITEM 4	10-1218	1
10	FP-SR-TAB	SIDERAIL TAB	10-1218	3
11	SUB-PSD-SIDERAIL 50 F DR	SIDE RAIL, 50 SERIES PSD. DRIVER SIDE FRONT	16-1206	1
12	SUB-PSD-SIDERAIL 50 F PS	SIDE RAIL, 50 SERIES PSD. PASSENGER SIDE FRONT	16-1206	1

NOTE:
1. BUTTON HEAD 5/16"x3/4" BOLT NOT SHOWN, PN # BO-5/16x3/4 BHC SS QTY:10

	REVISIONS		
REV.	DESCRIPTION	DATE	APPROVED
A	INITIAL RELEASE	5/03/2014	

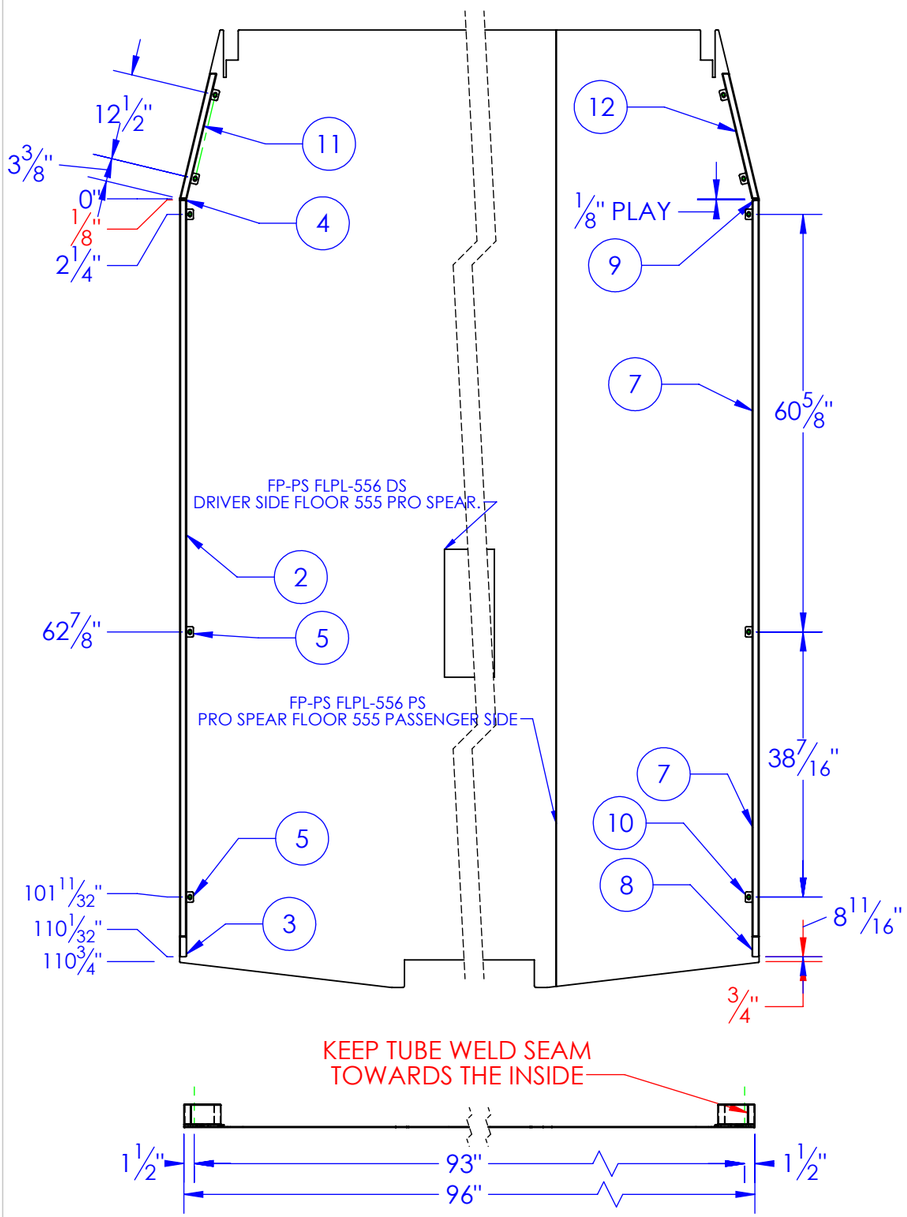

SUB-PSD-SIDERAIL 550 PS
SIDE RAIL PSD 550 RIGHT HAND

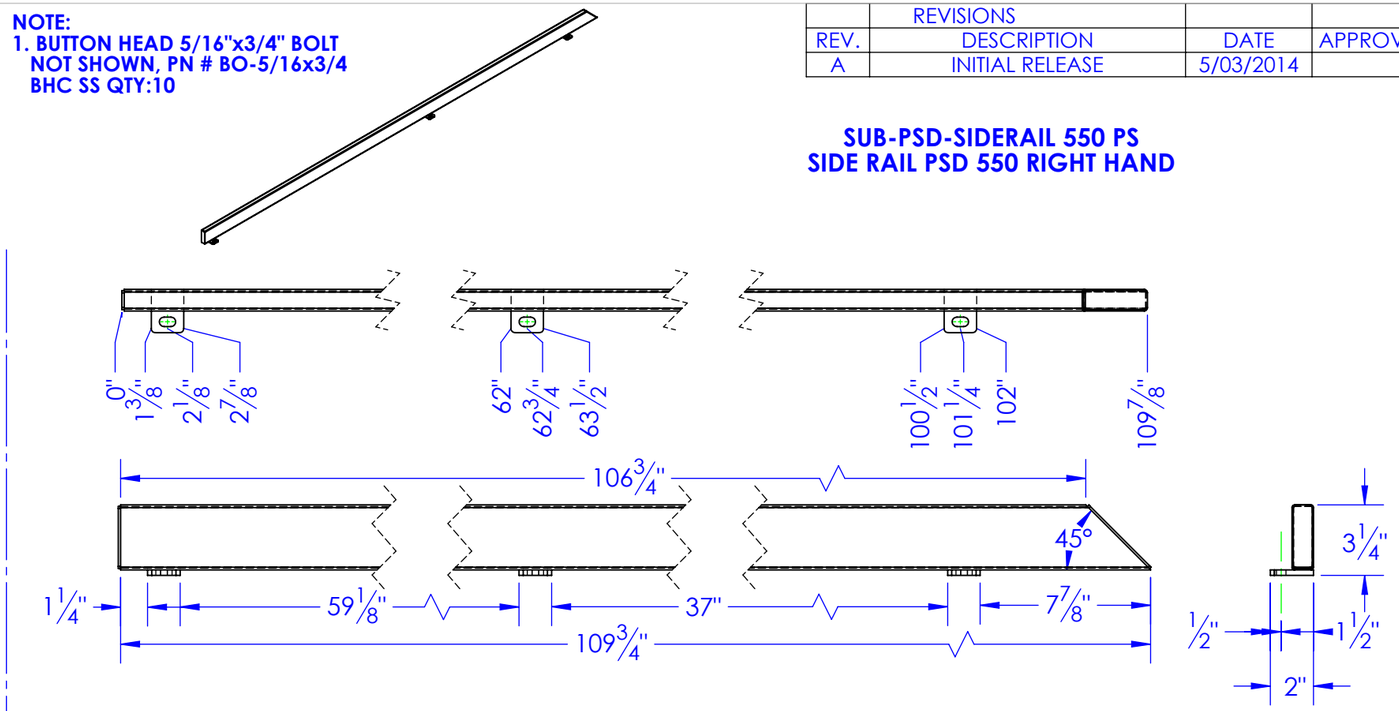

SUB-PSD-SIDERAIL 550 DS
SIDE RAIL PSD 550 LEFT HAND

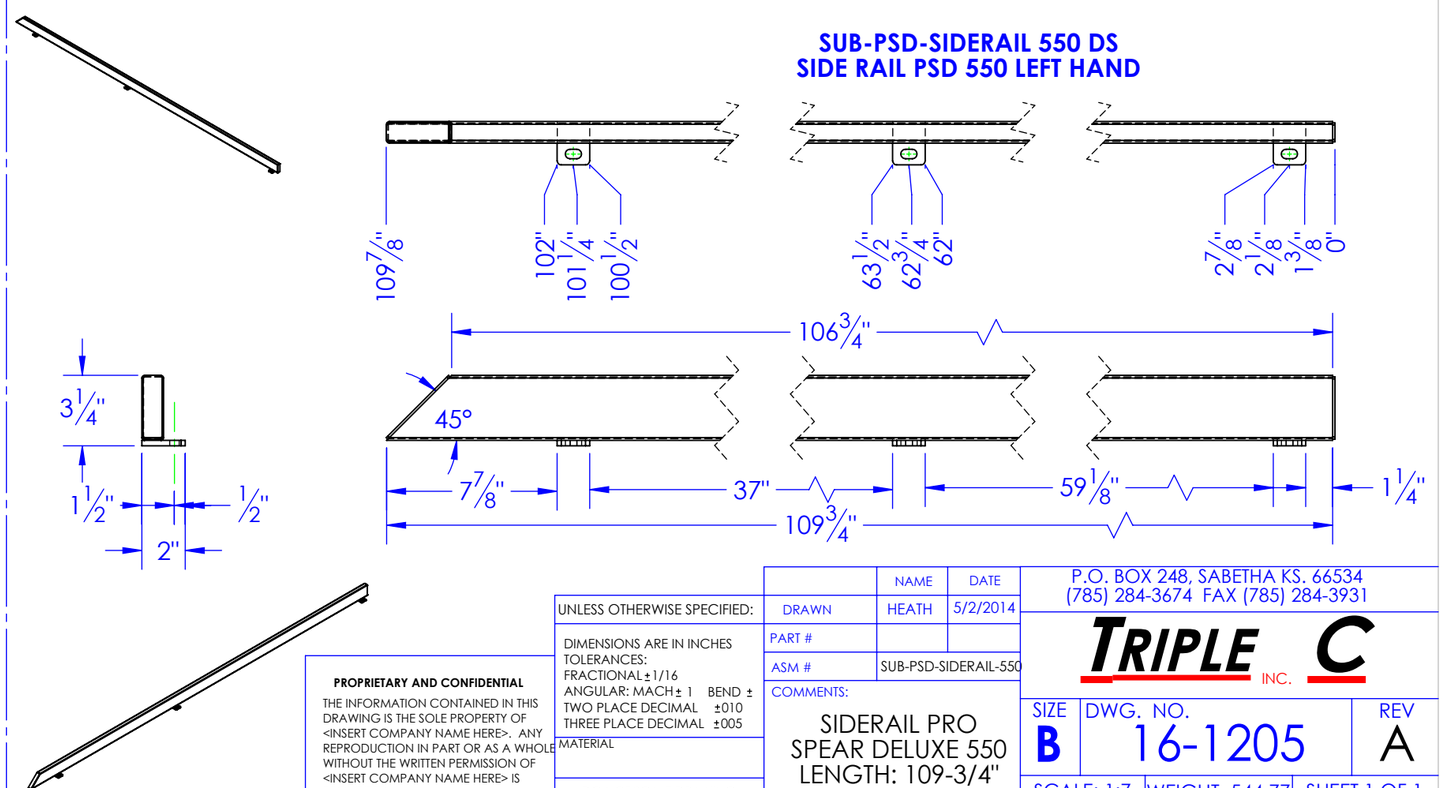

PROPRIETARY AND CONFIDENTIAL

THE INFORMATION CONTAINED IN THIS DRAWING IS THE SOLE PROPERTY OF <INSERT COMPANY NAME HERE>. ANY REPRODUCTION IN PART OR AS A WHOLE WITHOUT THE WRITTEN PERMISSION OF <INSERT COMPANY NAME HERE> IS PROHIBITED.

UNLESS OTHERWISE SPECIFIED:
DIMENSIONS ARE IN INCHES
TOLERANCES:
FRACTIONAL ±1/16
ANGULAR: MACH ± 1 BEND ±
TWO PLACE DECIMAL ±010
THREE PLACE DECIMAL ±005
MATERIAL
DO NOT SCALE DRAWING

	NAME	DATE
DRAWN	HEATH	5/2/2014
PART #		
ASM #	SUB-PSD-SIDERAIL-550	

COMMENTS:
SIDERAIL PRO
SPEAR DELUXE 550
LENGTH: 109-3/4"

P.O. BOX 248, SABETHA KS. 66534
(785) 284-3674 FAX (785) 284-3931
TRIPLE C INC.

SIZE	DWG. NO.	REV
B	16-1205	A
SCALE: 1:7	WEIGHT: 544.77	SHEET 1 OF 1